BF300 | METAL TUBE AREA VARIABLE FLOWMETER
WITH SWITCH AND 4-20MA ANALOG TRANSMITTER

imsystem
Technologies for Automation

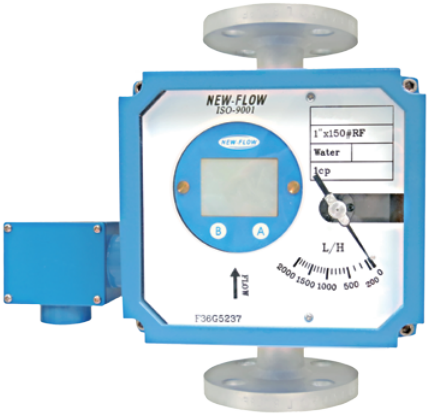

Principle

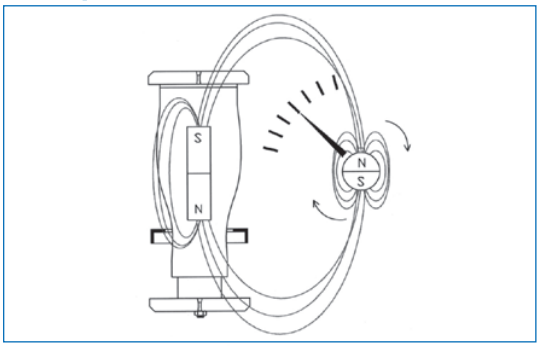

Approvals:

ABS TYPE APPROVED PRODUCT

CE 2810 (PED: 2014/68/EU)

SIL2 Certified

Ex II 2 G CE 2776

c UL us Switches with UL & CSA Recognized and File No. E41515.

Ex NEPSI GYB19.1793X

TD0400TJ
工電(2015)第00151號
(ITRI)2017第07-00302號

Patent No.

Taiwan: M332836
China: 1187801

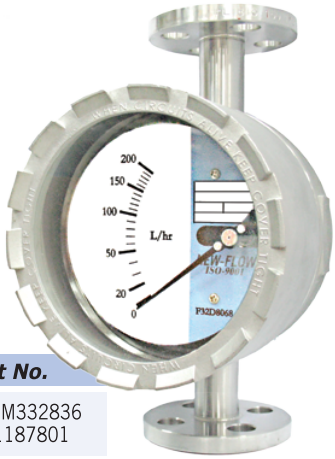

Technical Data

BF300 for high flows of gas, liquid, steam

Case Material: Aluminum alloy case with paint; SS316 available
Body Wetted Parts Material: SS316, SS316+PTFE Lining (PVDF float), others on request, indication via magnetic coupling (no sealed)
Lens Material: Safety Glass
Scales Calibrated: in l/h, m³/h, kg/h, %, etc.
Flow Rates For:
SS316 Float:
– Water: 1 l/h up to 200,000 l/h (special ranges on request)
– Air: 0.03 Nm³/h up to 5,400 Nm³/h (special ranges on request)
PVDF Float:
– Water: 4 l/h up to 10,000 l/h (special ranges on request)
– Air: 0.13 Nm³/h up to 180 Nm³/h (special ranges on request)
Connection Type: Thread Type, Flange Type, Trip Clamp & Sanitary (others on request)
Connection Size: ¼"~6"
Mounting: Vertical mounting only
Mounting Length: 250mm standard for size ¼"~5", 300mm standard for size 6"; Special length is on request
Protection Class: Weather Proof IP66 / IP68 or Explosion proof available
Accuracy: ±2% F.S (±1.6% F.S option)
Max. Pressure: 40 kg/cm² (standard); Option: up to 100 kg/cm²
Working Temperature: -50°C to +200°C (standard); up to 400°C on request
Option: Switch available (Micro switch 5A/125VAC, 5A/250VAC, 2A/30VDC); Adjustable Reed alarm switch available (form A bistable type, N.O. type); Adjustable Inductive alarm switch available; 4~20mA (2-wires) analog output available
LCD Display:
– Totalizer 10 Digital (Top) / Flow Rate 8 Digital (Bottom)
– Analog Output Available: 4~20mA (2-wires)
– Power Supply: 24 VDC
***HART® Communication:** available
Two Wire Transmitter with HART® Protocol:
HART COMMUNICATION PROTOCOL
–Galvanic Isolation
–Suitable for application in SIL 2 installations

Dimensions-mm

IP66 **Case Type:** (A-1) Rectangle Bolt Tighe Type
Housing Material: Aluminum alloy case with paint

1. Up to 200°C:

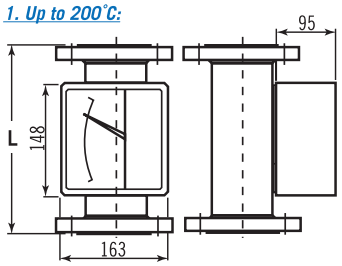

2. Up to 400°C c/w cooling element:

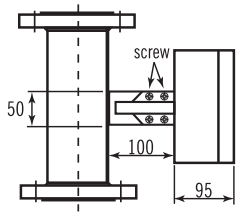

(A1)	½"	¾"	1"	1½"	2"	2½"	3"	4"	5"	6"
L	250	250	250	250	250	250	250	250	250	300

• Flange rating is ANSI 150LB; please consult with the manufacturer for others flange rating and customed L length is on request.

Case Type: (A-2) & (B) Round Screw Tight Type
Housing Material: **IP66** (A-2) Aluminum alloy, **IP68** (B) SS316

1. Up to 200°C:

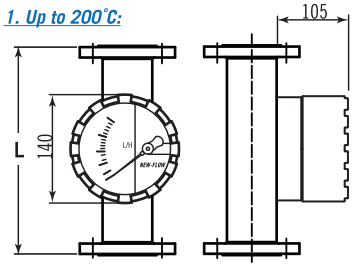

2. Up to 400°C c/w cooling element:

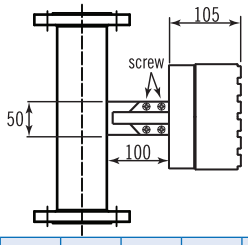

(A2 / B)	½"	¾"	1"	1½"	2"	2½"	3"	4"	5"	6"
L	250	250	250	250	250	250	250	250	250	300

• Flange rating is ANSI 150LB; please consult with the manufacturer for others flange rating and customed L length is on request.

Explosion Proof
Case Type: (C) Explosion Proof Certificate on Housing only
(D) & (D1) Taiwan Explosion Proof Certification
Housing Material: (C) Aluminum alloy, (D) Aluminum alloy, (D1) SS316

1. Up to 200°C:

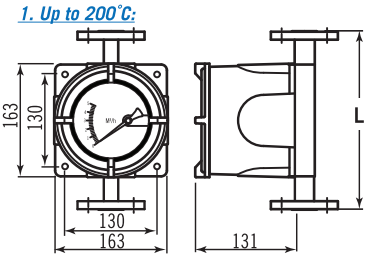

2. Up to 400°C c/w cooling element:

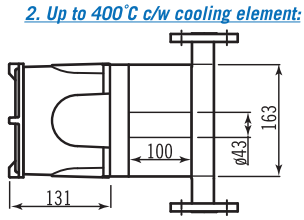

(C)	½"	¾"	1"	1½"	2"	2½"	3"	4"	5"	6"
L	250	250	250	250	250	250	300	300	300	300
(D / D1)	**½"**	**¾"**	**1"**	**1½"**	**2"**	**2½"**	**3"**	**4"**	**5"**	**6"**
L	250	250	250	250	250	250	250	250	250	300

• Flange rating is ANSI 150LB; please consult with the manufacturer for others flange rating and customed L length is on request.

Alarm / Analog Output

BF-300 / GS-M (Micro Switch)

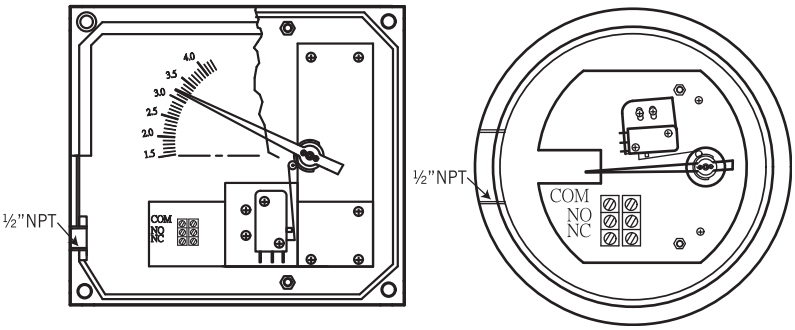

Adjustable Micro Switch, Series BF300/GS-M
1 adjustable alarm contact
Load: 5A/125VAC, 5A/250VAC, 2A/30VDC
Temperature: -25°C ~ +70°C (AMB)
Hysteresis: ±10% F.S (Dead Band)

BF-300 / GS-R (Reed Switch)

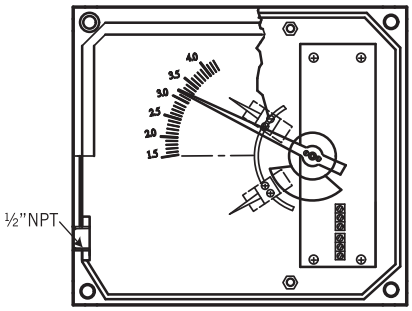

Alarm Switch: One or Two setting point, form A bistable type (N.O Type)
Hysteresis: ±10% F.S (Dead Band)
Switch Rating: AC 125V 0.5A / DC 100V 10W / Max. DC 250V < 40mA

1 adjustable alarm
Contact setting point should be within 10% to 100% of F.S

2 adjustable alarm
The second setting point should be a gap 40% from first setting point

BF-300 / GS-C (Inductive Switch)

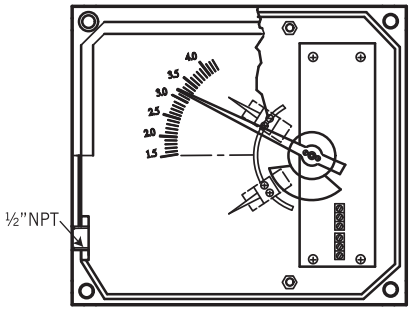

Adjustable Inductive Alarm Switch
Hysteresis: ±1% F.S (Dead Band)
Inductive Sensors Slotted Type: 3.5 mm Slot Switch

DC. voltage 2 wire's to DIN19234 (NAMUR) for use in hazardous areas
– Power Supply: 8 VDC (Ri.approx. 1kΩ)
– Current Consumption: Active face uncoved 3mA; Active face coved 1mA
– Ambient Temp.: -25°C ~ +70°C

Isolated barriers output relay for inductive sensor
– Rail Mounting
– Control Circuit EEx ia IIC
– EMC acc to NAMUR NE21
– Contact Loading 250 VAC 2A SPDT 40 VDC 2A

1 adjustable alarm
Contact setting point should be within 10% to 100% of F.S
For
24VDC : KFD2-SR2-Ex1.W
115VAC: KFA5-SR2-Ex1.W
230VAC: KFA6-SR2-Ex1.W

2 adjustable alarm
The second setting point should be a gap 65% from first setting point
For
24VDC : KFD2-SR2-Ex2.W
115VAC: KFA5-SR2-Ex2.W
230VAC: KFA6-SR2-Ex2.W

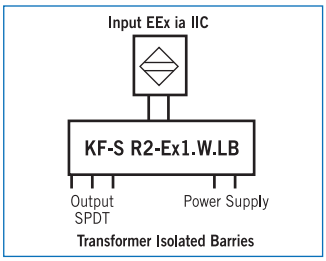

BF-300 / GT (Analog Output) / GTA (Hall Sensor)

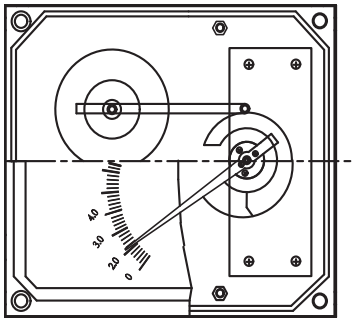

Electric Transmitter BF-300/GT/GTA
Analog Output Available: 4~20mA (2-wires)
No Alarm Switch Available
Power Supply: 24VDC
Temperature: -25°C ~ +70°C (AMB)

LCD Display / Totalizer

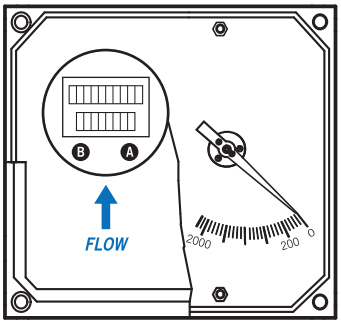

NOTE.
1. This is for the case type (A-1) only.
2. Please refer to the catalogue of D-1000 for the explosion proof type.

LCD Display: Totalizer 10 Digital (Top) / Flow Rate 8 Digital (Bottom)
Analog Output Available: 4~20mA (2-wires)
Power Supply: 24 VDC

Standard Scales

A. Float Material: SS316, SS316L available

Tube	L/H 20°C Water	NM³/H Air 0°C 1.013bar	PmmWater	Connection	Accuracy (NOTE 1.)
BF300a	1 ~ 10	0.03 ~ 0.3	≤750	½"	±5% F.S
BF300b	1.8 ~ 18	0.06 ~ 0.6	≤750	½"	±5% F.S
BF3001	2.5 ~ 25	0.075 ~ 0.75	≤750	½"	±5% F.S
BF3002	4 ~ 40	0.13 ~ 1.3	≤750	½"	±5% F.S
BF3003	5.5 ~ 55	0.17 ~ 1.7	≤750	½"	±5% F.S
BF3004	8 ~ 80	0.2 ~ 2	≤750	½"	±2% F.S
BF3005	16 ~ 160	0.5 ~ 5	≤750	½"	±2% F.S
BF3006	18 ~ 180	0.6 ~ 6	≤750	½"	±2% F.S
BF3007	30 ~ 300	1 ~ 10	≤750	½"	±2% F.S
BF3008	50 ~ 500	1.5 ~ 15	≤750	½"	±2% F.S
BF3009	60 ~ 600	1.8 ~ 18	≤750	½"	±2% F.S
BF3010	70 ~ 700	2 ~ 20	≤750	½"	±2% F.S
BF3010-1	100~ 1000	3 ~ 30	≤750	½"	±2% F.S
BF3011	100 ~ 1000	3 ~ 30	≤750	¾"	±2% F.S
BF3011-1	240 ~ 2400	8 ~ 80	≤750	¾"	±2% F.S
BF3012	120 ~ 1200	4 ~ 40	≤750	1"	±2% F.S
BF3013	160 ~ 1600	5 ~ 50	≤700	1"	±2% F.S
BF3014	200 ~ 2000	6 ~ 60	≤700	1"	±2% F.S
BF3015	240 ~ 2400	7 ~ 70	≤700	1"	±2% F.S
BF3016	280 ~ 2800	8.5 ~ 85	≤700	1"	±2% F.S
BF3017	320 ~ 3200	9 ~ 90	≤700	1"	±2% F.S
BF3018	350 ~ 3500	10 ~ 100	≤700	1"	±2% F.S
BF3018-1	500 ~ 5000	15 ~ 150	≤700	1"	±2% F.S
BF3019	500 ~ 5000	14 ~ 140	≤650	1½"	±2% F.S
BF3020	600 ~ 6000	15 ~ 150	≤650	1½"	±2% F.S
BF3021	700 ~ 7000	20 ~ 200	≤650	1½"	±2% F.S
BF3022	800 ~ 8000	24 ~ 240	≤650	1½"	±2% F.S
BF3022-1	1100 ~ 11000	24 ~ 240	≤650	1½"	±2% F.S
BF3023	1000 ~ 10000	30 ~ 300	≤650	2"	±2% F.S
BF3024	1200 ~ 12000	35 ~ 350	≤650	2"	±2% F.S
BF3025	1400 ~ 14000	40 ~ 400	≤650	2"	±2% F.S
BF3026	1500 ~ 15000	45 ~ 450	≤1000	2"	±2% F.S
BF3026-1	1800 ~ 18000	45 ~ 450	≤1000	2"	±2% F.S
BF3027	1800 ~ 18000	60 ~ 600	≤800	2½"	±2% F.S
BF3028	2000 ~ 20000	75 ~ 750	≤800	2½"	±2% F.S
BF3028-1	3000 ~ 30000	75 ~ 750	≤800	2½"	±2% F.S
BF3029	2300 ~ 23000	90 ~ 900	≤850	3"	±2% F.S
BF3030	2500 ~ 25000	120 ~ 1200	≤1000	3"	±2% F.S
BF3031	2800 ~ 28000	--------	≤1100	3"	±2% F.S
BF3032	3000 ~ 30000	--------	≤1200	3"	±2% F.S
BF300c	4000 ~ 40000	120 ~ 1200	≤2000	3"	±2% F.S
BF300d	6000 ~ 60000	180 ~ 1800	≤2200	3"	±2% F.S
BF3033	3500 ~ 35000	--------	≤1000	4"	±2% F.S
BF3034	4000 ~ 40000	--------	≤1000	4"	±2% F.S
BF3035	5000 ~ 50000	--------	≤1200	4"	±2% F.S
BF3036	6000 ~ 60000	--------	≤1500	4"	±2% F.S
BF300e	8500 ~ 85000	260 ~ 2600	≤2000	4"	±2% F.S
BF300f	10000 ~ 90000	300 ~ 2900	≤2200	4"	±2% F.S
BF300g	8000 ~ 80000	240 ~ 2400	≤2000	5"	±2% F.S
BF3037	10000 ~ 100000	300 ~ 3000	≤2000	5"	±2% F.S
BF300h	12000 ~ 120000	360 ~ 3600	≤2000	5"	±2% F.S
BF300i	15000 ~ 150000	450 ~ 4500	≤2500	6"	±2% F.S
BF300j	20000 ~ 200000	500 ~ 5400	≤2500	6"	±2% F.S

B. Float Material: PVDF (only SS316+PTFE lining wetted parts available)

Tube	L/H 20°C Water	NM³/H Air 0°C 1.013bar	PmmWater	Connection	Accuracy (NOTE 1.)
BF3001P	4 ~ 40	0.13 ~ 1.3	≤750	½"	±5% F.S
BF3002P	5.5 ~ 55	0.17 ~ 1.7	≤750	½"	±5% F.S
BF3003P	8 ~ 80	0.2 ~ 2	≤750	½"	±2% F.S
BF3004P	16 ~ 160	0.5 ~ 5	≤750	½"	±2% F.S
BF3005P	28 ~ 280	0.9 ~ 9	≤750	¾"	±2% F.S
BF3006P	35 ~ 350	1.1 ~ 11	≤750	¾"	±2% F.S
BF3007P	40~ 400	1.3 ~ 13	≤750	¾"	±2% F.S
BF3008P	50 ~ 500	1.5 ~ 15	≤750	1"	±2% F.S
BF3009P	70 ~ 700	2 ~ 20	≤700	1"	±2% F.S
BF3010P	90 ~ 900	2.5 ~ 25	≤700	1"	±2% F.S
BF3011P	100 ~ 1000	3 ~ 30	≤700	1"	±2% F.S
BF3012P	120 ~ 1200	4 ~ 40	≤700	1"	±2% F.S
BF3013P	160 ~ 1600	5 ~ 50	≤700	1"	±2% F.S
BF3014P	200 ~ 2000	6 ~ 60	≤700	1"	±2% F.S
BF3015P	250 ~ 2500	7 ~ 70	≤650	1"	±2% F.S
BF3016P	300 ~ 3000	9 ~ 90	≤650	1½"	±2% F.S
BF3017P	350 ~ 3500	10 ~ 100	≤650	1½"	±2% F.S
BF3018P	450 ~ 4500	12 ~ 120	≤650	1½"	±2% F.S
BF3019P	450 ~ 4500	13 ~ 130	≤650	1½"	±2% F.S
BF3020P	500 ~ 5000	14 ~ 140	≤650	1½"	±2% F.S
BF3021P	650 ~ 6500	18 ~ 180	≤650	2"	±2% F.S
BF3022P	700 ~ 7000	--------	≤650	2"	±2% F.S
BF3023P	800 ~ 8000	--------	≤650	2"	±2% F.S
BF3024P	900 ~ 9000	--------	≤650	2½"	±2% F.S
BF3025P	1000 ~ 10000	--------	≤650	2½"	±2% F.S

NOTE.

1. The accuracy ±5% F.S for tube BF300a/b and BF3001(P)~BF3003(P).
   The accuracy ±2% F.S for tube BF3004~BF3037 and BF3004P~BF3025P;
   option ±1.6% F.S on request.
2. Performance Technical Data are effective with date of issue and are subject to change without prior notice.

Damping Mechanical (Option Function)

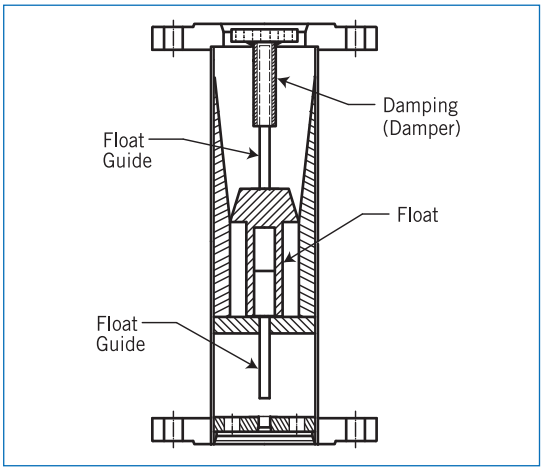

Ordering Information

BF300	Code	Type
	G	Indicating Only
	GS	Indicating + Switch
SIL2 Certified	GT	Indicating + 4~20mA (no alarm switch available)
SIL2 Certified	GTA	**Hall Sensor Type** / Indicating + 4~20mA (no alarm switch available)
SIL2 Certified	GTH	**HART Type** / Indicating + HART (no alarm switch available)

Code	Alarm		
O	Without Alarm Switch		
C1	One Inductive Alarm Switch	C2	Two Inductive Alarm Switches
M1	One Micro Switch		
R1	One Reed Switch	R2	Two Reed Switches

Code	Housing Protection / Case Type / Material
A1	IP66 / Rectangle Bolt Tight Type / Aluminum alloy
A2	IP66 / Round Screw Tight Type / Aluminum alloy
B1	IP68 / Round Bayonet Ring Type / SS316(indicating only)
B2	IP68 / Round Screw Tight Type / SS316
C	***(Ex. Certificate on Housing only)*** / Aluminum alloy Class I, Groups B, C & D; Class II, Groups E, F & G; NEMA 4, 7, 9
D	***(Taiwan Explosion Proof Certification)*** / Aluminum alloy Ex d IIB + H_2 T6 Gb
D1	***(Taiwan Explosion Proof Certification)*** / SS316 Ex d IIB + H_2 T6 Gb
X	***(Europe Union ATEX Certification)*** / Aluminum alloy II 2 G Ex db IIB + H_2 T6 Gb Ta -20°C to +60°C
G	***(China Explosion Proof Certification)*** / Aluminum alloy Ex d IIB + H_2 T6 Gb

Code	Body & Wetted Parts Material		
A	SS316, Standard	B	SS316L
C	SS316+PTFE Lining (only PVDF float available)		
O	Option		

Code	Float Material
	(A) SS316 **(B)** SS316L **(C)** PVDF **(O)** Option

Code	Connection Rating
0	Thread Connection
5	JIS 5K
10	JIS 10K
20	JIS 20K
15	ANSI 150#
30	ANSI 300#
60	ANSI 600#
90	ANSI 900#
T	Other: _____

Code	Connection Size		
4B	¼"BSP (Female)	4N	¼"NPT (Female)
2B	½"BSP (Female)	2N	½"NPT (Female)
6B	¾"BSP (Female)	6N	¾"NPT (Female)
10B	1"BSP (Female)	10N	1"NPT (Female)
2F	¼" Flange		
4F	½" Flange		
6F	¾" Flange		
10F	1" Flange		
12F	1½" Flange		
14F	1¼" Flange		
20F	2" Flange		
22F	2½" Flange		
30F	3" Flange		
40F	4" Flange		
50F	5" Flange		
60F	6" Flange		

Code	Transmitter Type, 4~20mA
G	General Type
O	Without Transmitter

Code	Fluid
	(G) Gas **(O)** Oil **(L)** Liquid **(S)** Steam

Code	Range
S	Standard Range
	Please direct fill out the flow range in the order code.

Code	LCD Display
D0	With LCD Display IP66, for A1 case only
D	With LCD Display Explosion Proof, (assemble with D-1000) **NOTE.1**
N	Without

Code	Damper
D	With
N	Without

Code	Conduit
N	Without
1	½"NPT(F)
2	¾"NPT(F)

CE Mark Request :
If stamp the CE2810 mark is necessary, please consult with the manufacturer.

BF300							+						

NOTE:
1. Custom-made flow range and flange size upon request.
2. Please fill in the ordering information and service condition

Special Instruction, if any:
_____
_____
_____

Service Condition:
Fluid name: _____
Sp. Gr. (Density): _____
Viscosity: _____
Press.: _____
Temp.: _____
Full Scale: _____

NOTE.1 LCD Display:
Assemble with D-1000 Series